Building Guide

Colorado Chapter of the International Code Council

Single Family Residential Patio Covers & Carports

How to Use this Guide

Check with your jurisdiction regarding type of submittal(paper or electronic) and for additional requirements. Draw to scale and complete the following(hint: use graph paper with ¼" squares. Example: ¼" = 1').

1 Complete this Building Guide by filling in the blanks on page two, and indicating which construction details will be used.

2 Provide 2 Plot Plans (**site plan**) showing dimensions of your project or addition and its relationship to existing buildings or structures on the property and the distance to existing property lines drawn to scale. See Page 2

3 Fill out a building permit application.

The majority of permit applications are processed with little delay. The submitted documents will help determine if the project is in compliance with building safety codes, zoning ordinances and other applicable laws.

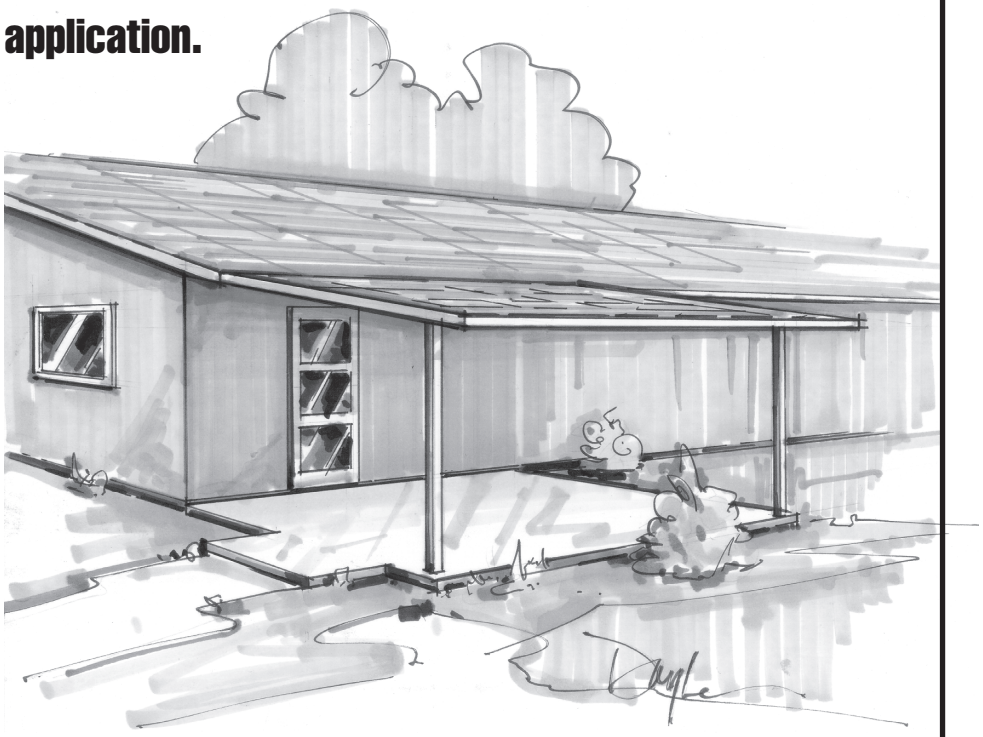

The Colorado Chapter of the International Code Council is a professional organization seeking to promote the public health, safety and welfare to building construction. We appreciate your feedback and suggestions, please write to the Colorado Chapter of the International Code Council, P.O. Box 961, Arvada, CO 80001. This building guide can be found on Colorado Chapter of the International Code Council website at: http://www.coloradochaptericc.org

This handout was developed by the Colorado Chapter of the International Code Council as a basic plan submittal under the 2018 International Residential Code. It is not intended to cover all circumstances. Check with your Department of Building Safety for additional requirements.

Town of Castle Rock Colorado
100 N Wilcox St
Castle Rock, CO 80104
720-733-3527
Buildingcounter@CRgov.com

Single Family Residential Patio Covers & Carports

Site Plan Example

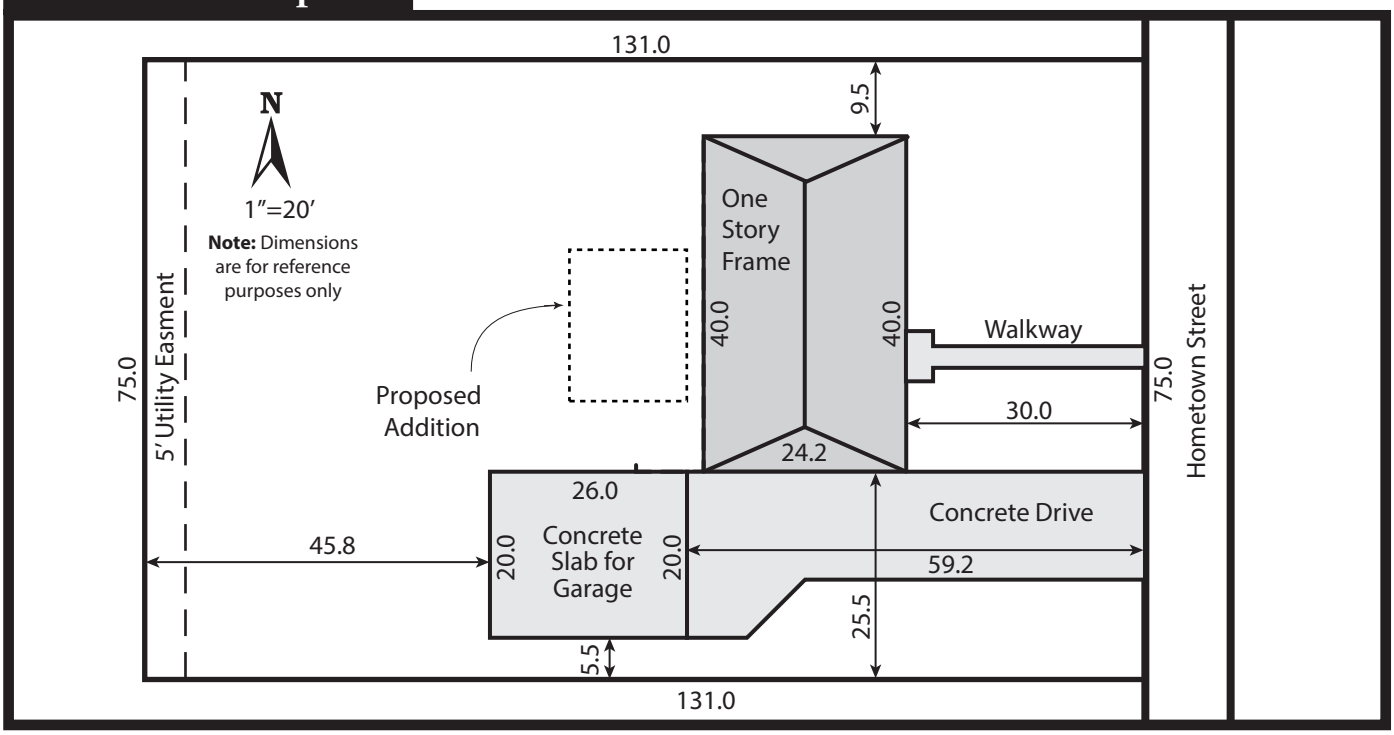

Note: Manufactured homes require independent/self supported patio structure

For all details on page 4 - Notches on cantelivered portions of rafters are permitted provided the dimension of the remaining portion of the rafter is not less than 3 1/2 inches(89mm) and the lenght of the cantilever does not exceed 24 inches (610mm)

This handout was developed by the Colorado Chapter of the International Code Council as a basic plan submittal under the 2018 International Residential Code. It is not intended to cover all circumstances. Check with your Department of Building Safety for additional requirements.

Town of Castle Rock Colorado
100 N Wilcox St
Castle Rock, CO 80104
720-733-3527
Buildingcounter@CRgov.com

Single Family Residential Patio Covers & Carports

Directions

Address: _____

1. Fill in the blanks with dimensions and materials which will be used to build the structure. Please print legibly.
2. Indicate in the check boxes which details from page 4 will be used. Please note if any of the sides of your carport addition are closer than 5'-0" to the property line, that side of the carport must be enclosed with a solid 1 hour fire rated wall as shown in Alternate Details B and C. You must however, keep at least two sides of the carport open to conform to the building code requirements. Zoning approval is required.
3. Roofing to be installed per manufacturer's instructions, including low slope application and required inspections made.

Roof covering_____ *(example: Class A 3 tab shingles)*

Underlayment_____ *(example: 15# felt with 19" laps)*

Size and Amount of Lags _____ *(example: Two 1/2"x 4 1/2" lags @ 16" O.C.)*

Sheathing_____ *(example: 1/2" exterior plywood)*

12 / pitch ___

2x___rafters spaced___" O.C. *(example: 2 x 8 rafters spaced 24" O.C.)*

Patio Section

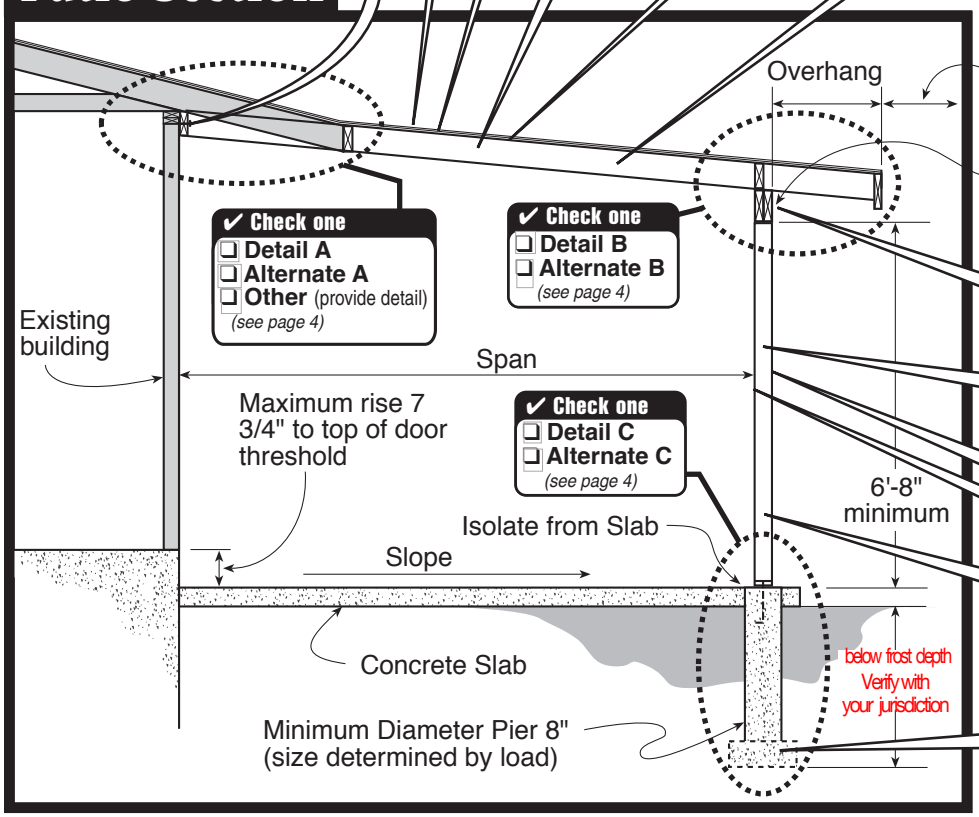

Note: Walls, posts, and overhangs closer than 5' to the property line to be 1hr. rated

No closer than 2 feet to property line

Beam splices to occur over posts with 1 1/2" bearing

(__)____"x____"beam *(example: (2) 2"x10")*

Span_____ *(example: 12' 0")*

Siding_____ *(for Alternate B only)*

____"x____"posts *(example: 4"x4")* spaced _____ apart *(example: 6')*

Footing ____"x____" *(for Alternate C only)*

This handout was developed by the Colorado Chapter of the International Code Council as a basic plan submittal under the 2018 International Residential Code. It is not intended to cover all circumstances. Check with your Department of Building Safety for additional requirements.

Town of Castle Rock Colorado
100 N Wilcox St
Castle Rock, CO 80104
720-733-3527
Buildingcounter@CRgov.com

Single Family Residential Patio Covers & Carports

Detail A

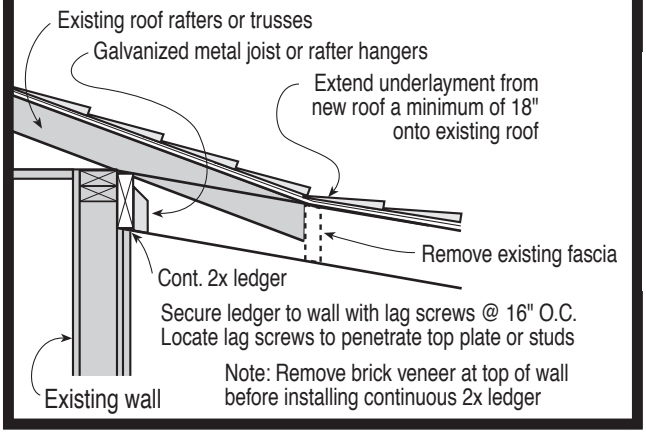

Alternate Detail A

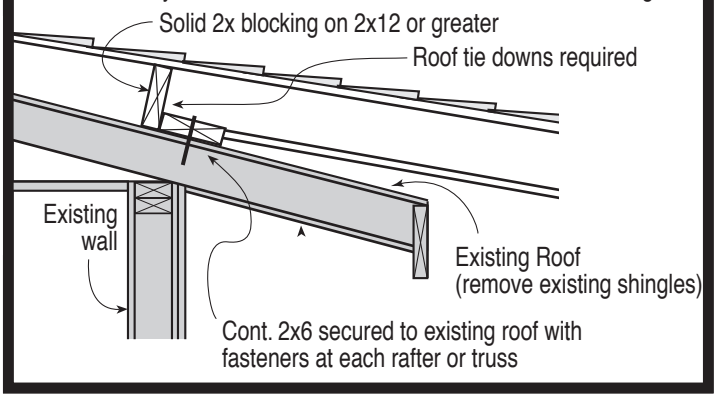

Detail B

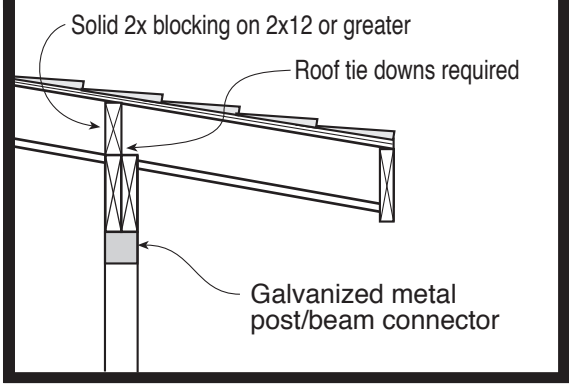

Alternate Detail B - 1 Hour Wall

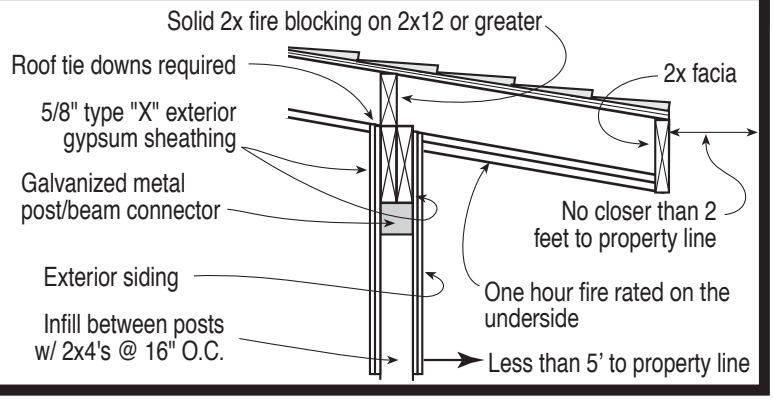

Detail C

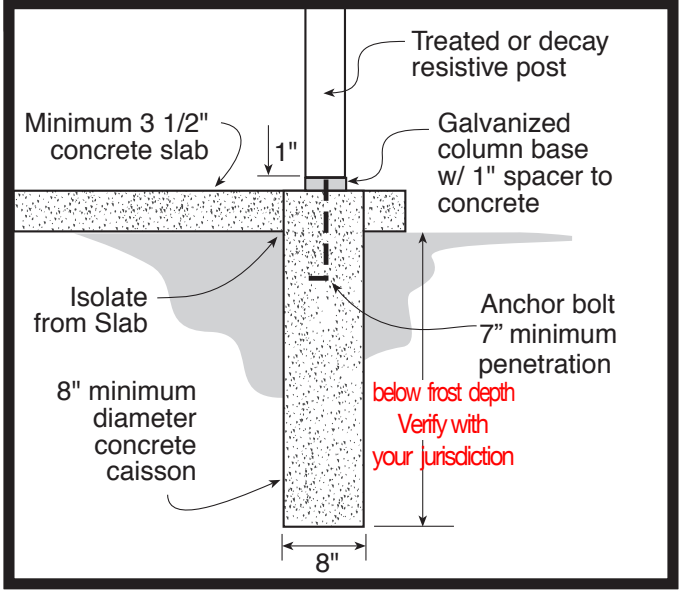

Alternate Detail C - 1 Hour Wall

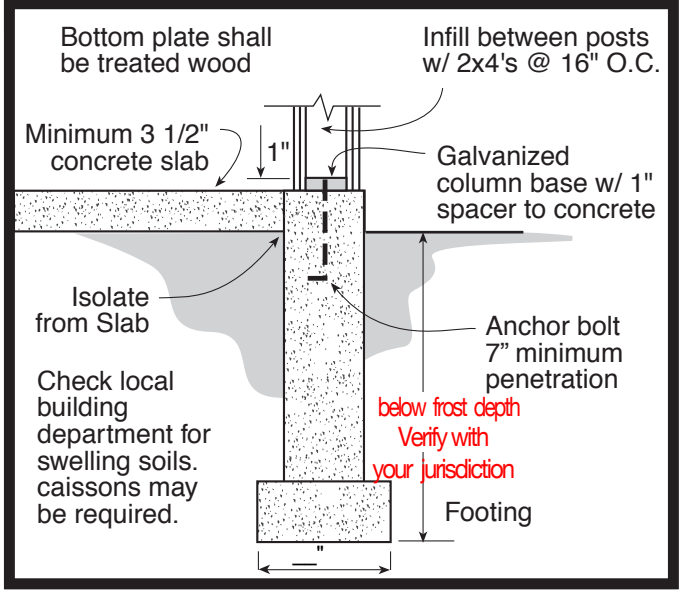

This handout was developed by the Colorado Chapter of the International Code Council as a basic plan submittal under the 2018 International Residential Code. It is not intended to cover all circumstances. Check with your Department of Building Safety for additional requirements.

Town of Castle Rock Colorado
100 N Wilcox St
Castle Rock, CO 80104
720-733-3527
Buildingcounter@CRgov.com