Building Guide

Colorado Chapter of the International Code Council

Single Family Residential One Story Addition

How to Use this Guide

Check with your jurisdiction regarding type of submittal (paper or electronic) and for additional requirements.Draw to scale and complete the following (*hint: use graph paper with ¼" squares. Example: ¼" = 1'*).

1. Complete this Building Guide by filling in the blanks on page three and indicating which construction details will be used, and R value of insulation used.

2. Provide Plot Plan showing dimensions of your project or addition and its relationship to existing buildings or structures on the property. Show all easements and the distance to existing property lines drawn to scale. See example on page 2.

3. Provide Floorplans.
Drawn to scale. See example on page 5. Structural, section view, elevation or other drawings may be required.

4. Fill out a Building Permit Application.

The majority of permit applications are processed with little delay. The submitted documents will help determine if the project is in compliance with building safety codes, zoning ordinances and other applicable laws.

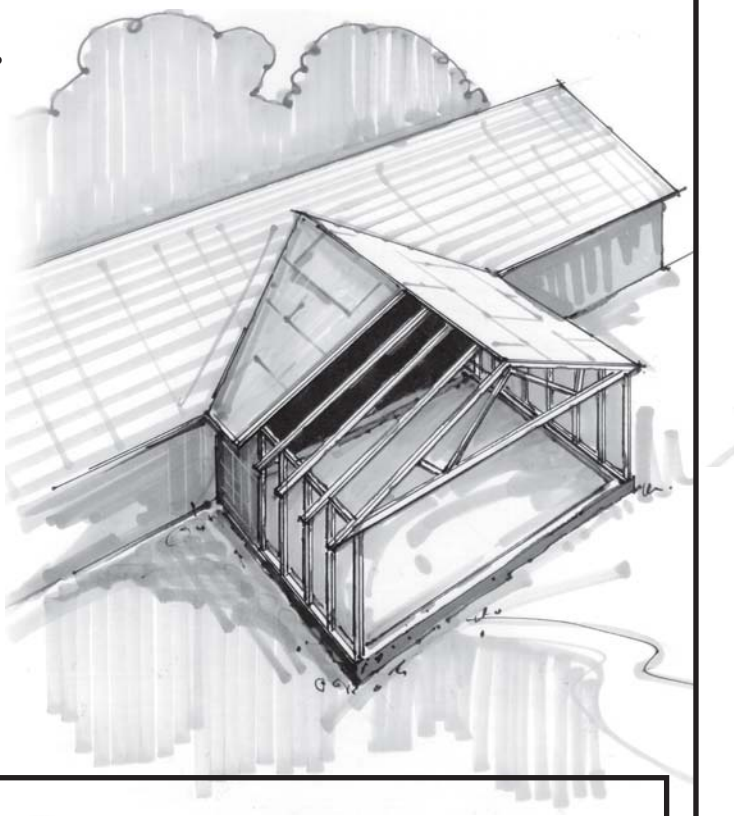

Smoke alarms and carbon monoxide alarms are required.

The Colorado Chapter of the International Code Council is a professional organization seeking to promote the public health, safety and welfare to building construction. We appreciate your feedback and suggestions please write to the Colorado Chapter of the International Code Council, P.O. Box 961, Arvada, CO 80001. This building guide can be found on the Colorado Chapter of the International Code Coulcil website at http://www.coloradochapteric c.org

This handout was developed by the Colorado Chapter of the International Code Council as a basic plan submittal under the 2018 International Residential Code. It is not intended to cover all circumstances. Check with your Department of Building Safety for additional requirements.

Town of Castle Rock Colorado
100 N Wilcox St
Castle Rock, CO 80104
720-733-3527
Buildingcounter@CRgov.com

Single Family Residential One Story Addition

Note: A plot plan (plan view) showing the dimensions of your project or additions and its relationships to existing buildings or structures on the property must be included. In addition to project dimensions, your plot plan must also show other details such as post locations and spacing, joist and beam spans, and any other pertinent information not shown on the section drawing.

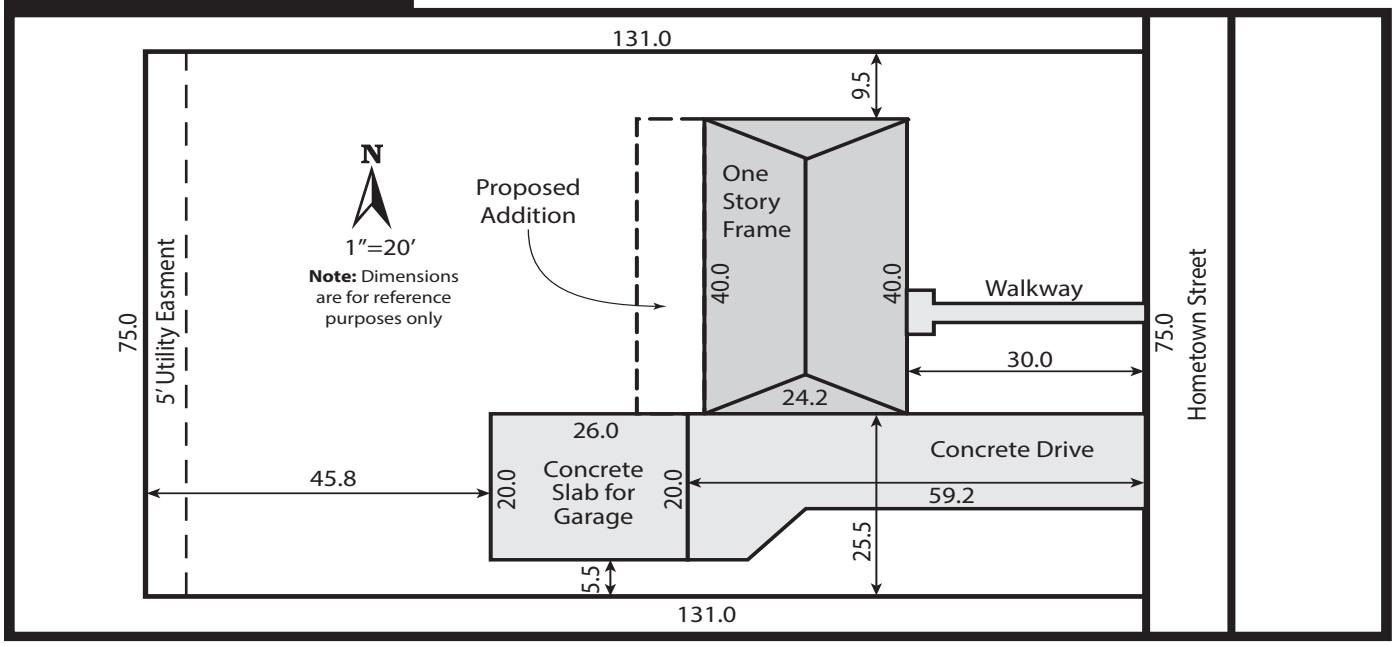

This handout was developed by the Colorado Chapter of the International Code Council as a basic plan submittal under the 2018 International Residential Code. It is not intended to cover all circumstances. Check with your Department of Building Safety for additional requirements.

Town of Castle Rock Colorado
100 N Wilcox St
Castle Rock, CO 80104
720-733-3527
Buildingcounter@CRgov.com

Single Family Residential One Story Addition

2x____rafters spaced____" O.C. or
Manufactured Trusses spaced____" O.C.
(example: 2 x 12 Rafters Spaced 24" O.C.)

Sheathing_____
(example: 1/2" exterior plywood)

Minimum 1x____ridge board
(example: 1 x 12)

Roof covering_____
(example: Class A 3 tab shingles)

Note: For roofs with slopes less than 4:12, follow manufacturer's instructions for low slope application of roofing material.

12 / pitch ____

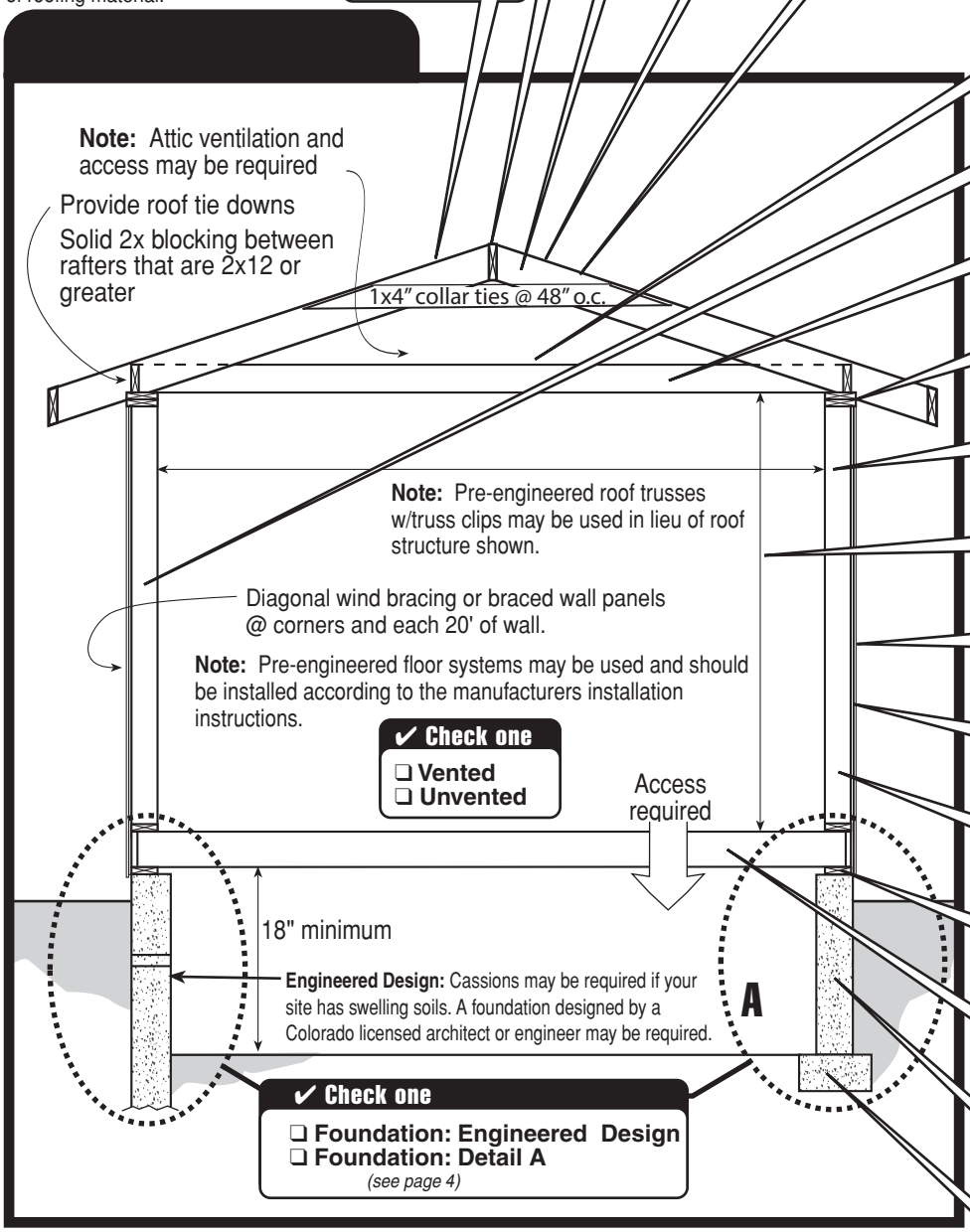

Ceiling Insulation _____
(example: R-49)

Wall Insulation _____
(example: R-20 Fiberglass Batts)

2x____ceiling joists @ ____O.C.
(example: 2 x 8 @ 24" O.C.)

Double 2x____top plate
(example: 2 x 6)

Span_____
(example: 23' 5")

Ceiling height_____
(example: 8')

Siding_____
(example: lap or T-111)

Wall sheathing_____
(example: 1/2" exterior plywood)

2x____studs @____ O.C.
(example: 2 x 6 @ 24" O.C.)

Cont. 2x ____ sill plate
(example: 2 x 4) decay resistant

2x__ Joists @ ____ O.C.
(example: 2x10 @24" O.C.)

Wall width _____ "
(example: 8")

Footing size ____" x ____"
(example: 8" X 16")

Property Address:

This handout was developed by the Colorado Chapter of the International Code Council as a basic plan submittal under the 2018 International Residential Code. It is not intended to cover all circumstances. Check with your Department of Building Safety for additional requirements.

TOWN OF CASTLE ROCK COLORADO
100 N Wilcox St
Castle Rock, CO 80104
720-733-3527
Buildingcounter@CRgov.com

Single Family Residential One Story Addition

Site Plan

1. When drawing your plot plan be sure to show the location of electric, gas, sewer and water service lines. If you don't know where they are, call the Public Service Utility Notification Center of Colorado, 1-800-922-1987 or 811. They will come out and locate lines for you. Remember to ask them about the cost.

2. Show where the existing electric and gas meters are located on your home. These meters may have to be relocated and it is best to know this before you start construction.

Floor Plan

1. Smoke alarms and CO alarms. Smoke alarms are required to be hardwired and interconnected in new and existing bedrooms, halls and one on each level unless removal of interior wall or ceiling finishes would be required. In this case, battery operated devices are acceptable.

Carbon Monoxide alarms are required on each floor with bedrooms. They are recommended to be located no farther than 15 ft. from any bedroom entrance. Do not install within 15 ft. of a fuel burning appliances. Follow manufacture's recommendations for location testing and replacement.

2. Additions not to enclose bedroom or basement egress windows.

3. Safety glass is required at specific locations. When you draw in the location of the new windows on the floor plan, the plan reviewer can identify which ones require safety glass.

4. Heat is required in all habitable rooms. Show how the addition will be heated on the plan.

Electric Code

Existing electric service may require an upgrade or relocation. Indicate the size of your electric service (the number on the main breaker) on your plan. This can help the plan reviewer determine if an upgrade is needed before you start construction.

Roof Overframe

When constructing a new valley, use a continuous board under the bottom cut of the new rafters to provide a solid nailing surface. The board should be at least 2" thick, nominal and should be at least as wide as the base of the new rafter.

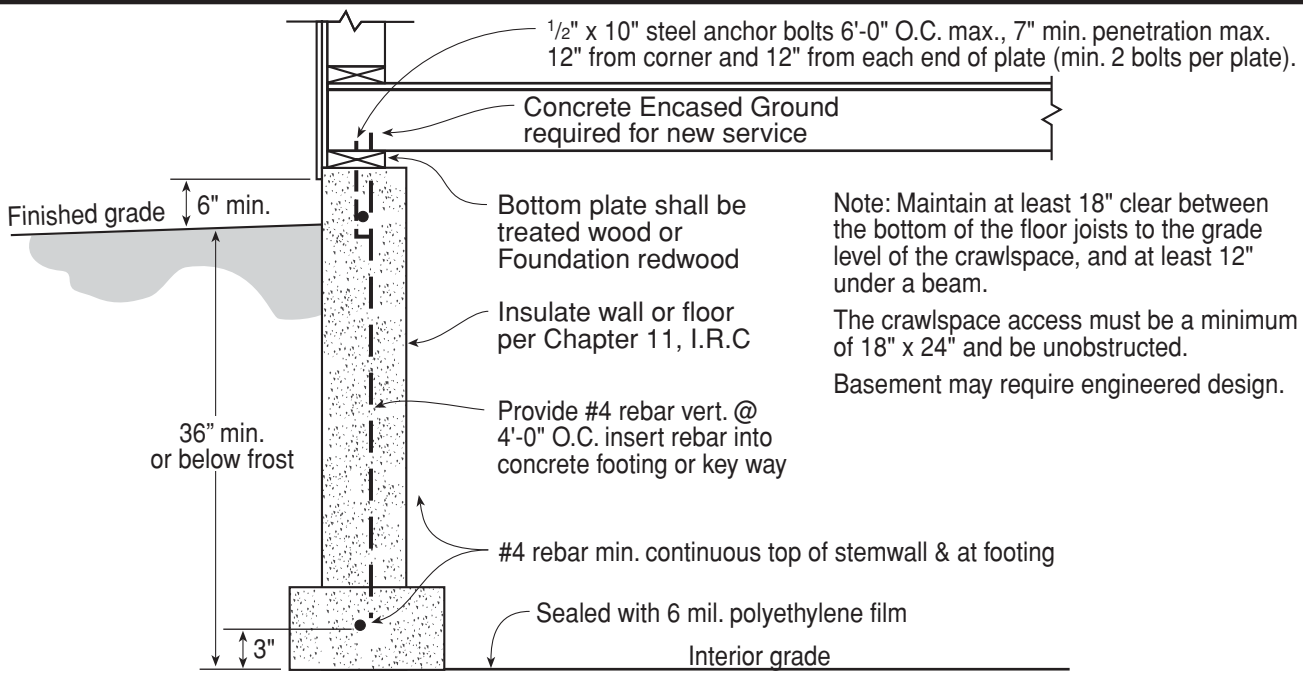

Note: Maintain at least 18" clear between the bottom of the floor joists to the grade level of the crawlspace, and at least 12" under a beam.

The crawlspace access must be a minimum of 18" x 24" and be unobstructed.

Basement may require engineered design.

This handout was developed by the Colorado Chapter of the International Code Council as a basic plan submittal under the 2018 International Residential Code. It is not intended to cover all circumstances. Check with your Department of Building Safety for additional requirements.

Town of Castle Rock Colorado
100 N Wilcox St
Castle Rock, CO 80104
720-733-3527
Buildingcounter@CRgov.com

Single Family Residential One Story Addition

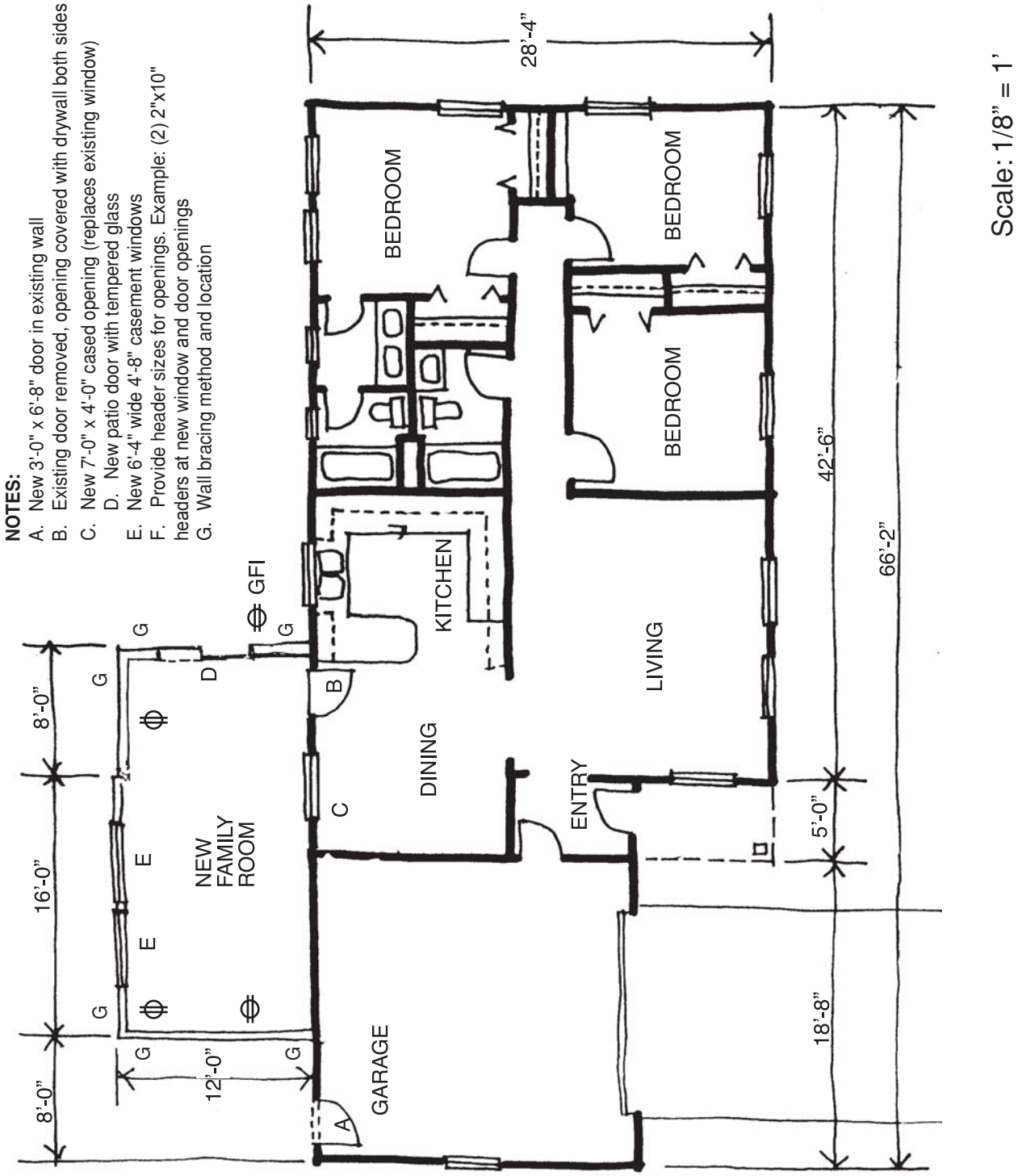

This handout was developed by the Colorado Chapter of the International Code Council as a basic plan submittal under the 2018 International Residential Code. It is not intended to cover all circumstances. Check with your Department of Building Safety for additional requirements.

TOWN OF CASTLE ROCK COLORADO
100 N Wilcox St
Castle Rock, CO 80104
720-733-3527
Buildingcounter@CRgov.com